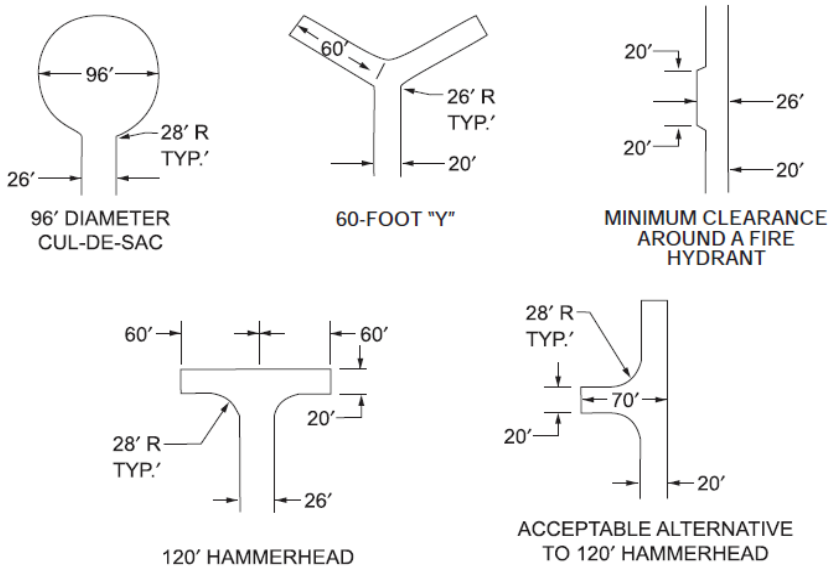


For SI: 1 foot = 304.8 mm.

**FIGURE D103.1**
**DEAD-END FIRE APPARATUS ACCESS ROAD TURNAROUND**